Secure Remote Desktop (SRD) Introduction and Demo

http://daac.hpc.mil/software/SRD/

Richard Walters / Dave Pratt

08/16/2016

Brief History

- **Timeline**

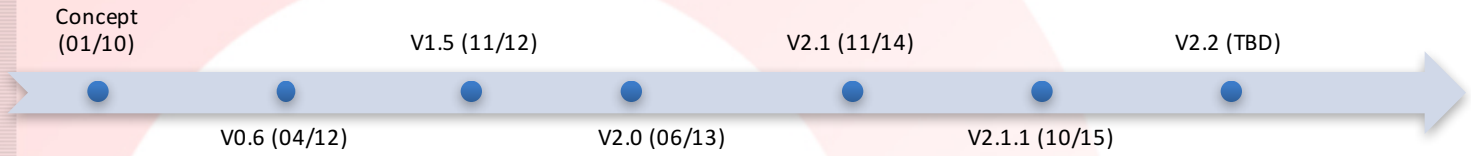

- **DAAC Focus on Visualization**
  - Very large memory / large data problems.
  - Massive rendering needs.
  - Interactive data manipulation.
- **Supported Applications**
  - Ensight, Paraview, Visit (primary DAAC supported).
  - MatLab, TecPlot, LsDyna, ... (COTS / GOTS software).
- **DAAC Brainchild**
  - The DAAC provides visualization support to all HPCMP researchers
  - Unique position to identify gaps in user capabilities.

Primary Focus

- **Traditional**
  - Generate data sets on big-iron compute engines.
  - Transfer data to visualization system.
  - Post process data on viz system.
- **Problems**
  - Data sets continue to grow.
  - Impossible to generate data on viz system.
  - Impractical to transfer data to viz system.
  - Expensive to acquire and maintain high-end visualization workstations.
- **SRD**
  - Fill the gap.
  - Provide a graphical desktop on remote rendering hardware.
  - Centrally located, juiced-up graphics post processing engines.
  - At, or adjacent to, data compute engines.

Key Terms

- **HPCMP Toolkit**
  - The standard HPCMP software suite (Kerberos, ssh/plink).
- **Client Node**
  - The workstation at a user's physical location (Linux, Mac, Windows).
- **Login Node**
  - The publically accessible host serving as a gateway to a US/super.
  - Multi-homed node mapping to the same generic hostname (us.arl.hpc.mil, us.afrl.hpc.mil, us.erdc.hpc.mil, …)
- **Compute Node**
  - One of many nodes earmarked exclusively for computational work.
  - Graphic compute nodes have display hardware attached (NVIDIA Tesla K40 / M2050)
  - Not externally visible.

Security / Design Constraints

- Full compliance with DoD security guidelines.
- No escalation of privilege to negotiate a connection.
- Standard, accepted connection protocols.
- Minimal customization of compute environments.

- No external connectivity on compute nodes.
- Hardware rendering.
- Re-startable jobs (immune to network failures).

Security / Design Goals

- Flexibility of implementation.
- Local, unique security policies allowed at each site.

- Minimal user learning curve for access.
- Connection flexibility tailored to client network.
- Client-driven interaction.
- Extendable (users can run their own apps).
- Minimize login node processing (no state).
- Minimize long-lived connections.
- Established, existing, and approved software solutions preferred to “rolling our own”.

Framework

- **SRD Server Software (Plumbing)**
  - Perl scripts running on login / compute nodes.
  - Job submission via PBS.
  - Communication channel creation (setting up the piping).
  - Manage HPCMP security and US/Super site requirements
- **SRD Client Software (Plumbing)**
  - Perl / Java client communicating only with login node server software.
  - User driven.
- **VNC Server / Client (Workhorse)**
  - Xvnc runs on compute node with direct access to graphics hardware.
  - Preload a “faker” GL library to intercept a subset gl/glx commands.
  - Execute some OpenGL application.
  - Display buffer selectively copied to in-memory Xvnc pbuffer.
  - On glSwapBuffer() the pbuffer is sent to the client as a xPutImage().
  - 3D, hardware accelerated, graphics at the price of a 2D bitmap stream.

Implementation

- **Compute Node**
  - Exclusive access to a given compute node for duration of job.
  - Enforced by PBS epilogue/prologue scripts (X11 cookie / sshd config).
  - Xvnc listening off arbitrary, non-privileged port.
  - Generates OTP.
  - Pam authentication on incoming connect requests.
- **Login Node**
  - Wrapper to coordinate PBS job control (submit, status, delete).
  - Proxy for compute node requests on behalf of the client.
  - Creates ssh port forward to appropriate compute node (second hop).
- **Client Node**
  - Authenticate outside of SRD.
  - Creates ssh port forward to corresponding login node port (first hop).
  - Launches VNC viewer on local arbitrary port.

Network Connectivity

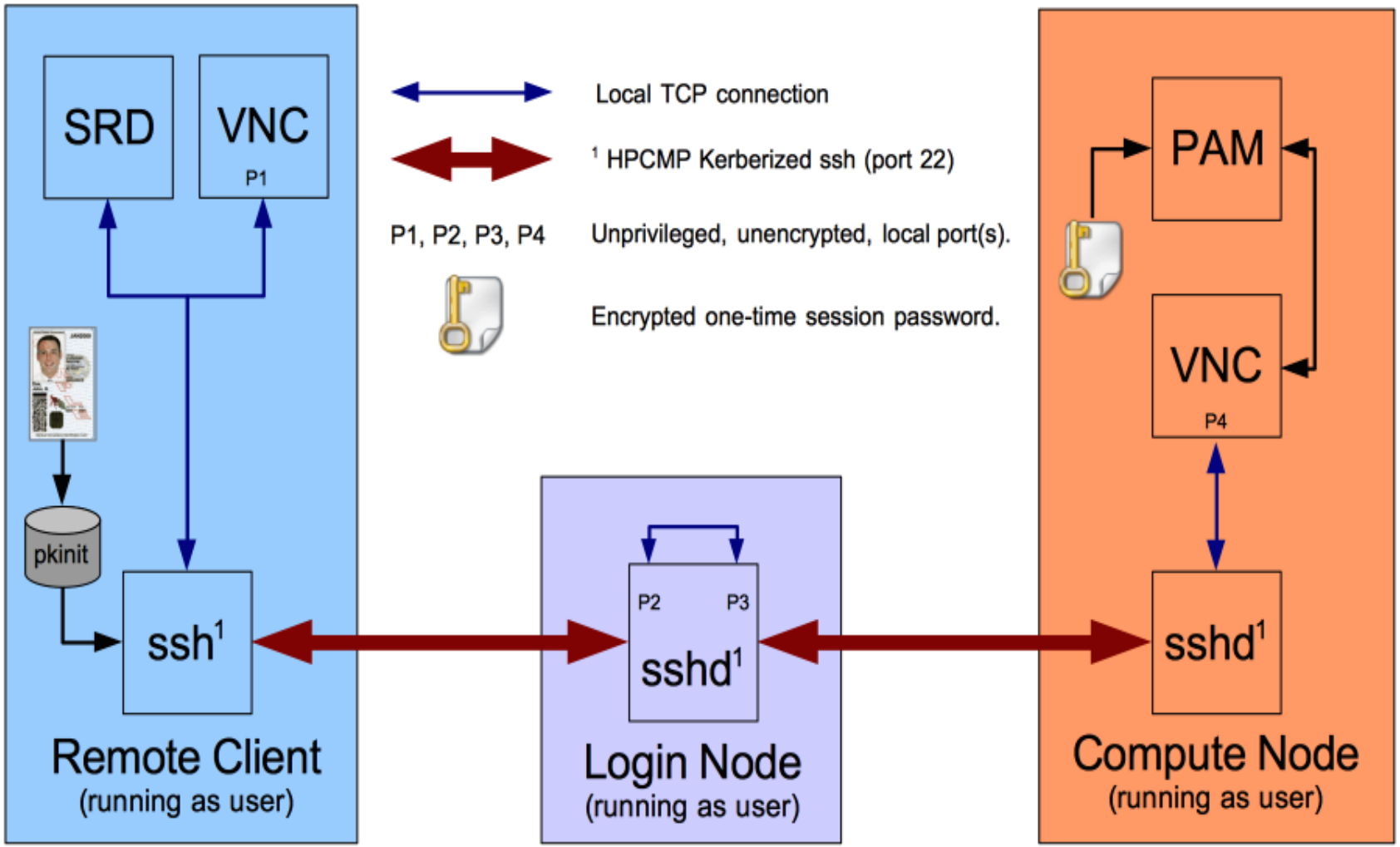

SRD Setup

```
m0040
mac> mkdir /tmp/SRD
mac> cd /tmp/SRD
mac> curl -s https://daac.hpc.mil/software/SRD/release/srdSetup_2.1.1.352.tgz > srdSetup_2.1.1.352.tgz
mac> tar xzf ./srdSetup_2.1.1.352.tgz
mac> java -jar srdSetup.jar
INFO    - [ 2016-07-12T10:59:00.790 ] - mi
ation preferences found.  Updating propert
```

SRD Setup

Setup

Java Client in /Users/dpratt/SRD/v211 Browse

Perl Client in /Users/dpratt/SRD/v211 Browse

HPCMP Username dpratt

Prerequisites

SSH Command /usr/local/ossh/bin/ssh Browse

Options

Install Docs Merge Site Files External Viewer Overwrite Old

Setup Quit

SRD Setup Success

SRD Java Directory: /Users/dpratt/SRD/v211

To run the Java client, move into the SRD Java directory above and double-click **srd.jar** or type the following

java -jar srd.jar

For more details, please see the documentation at

http://daac.hpc.mil/software/SRD

OK

https://daac.hpc.mil/software/SRD/srdSetup.html

SRD Execution

m0040

```
mac> cd /Users/dpratt/SRD/v211
mac> java -jar srd.jar
```

SRD

TOPAZ

Host: topaz.erdc.hpc.mil
Processors: 251272
Features: ARS

15 s

Id	Name	Owner	State	Queue
405262.top...	gnome.sh	[redacted]	Running	standard_sm
405322.top...	resv.sh	[redacted]	Running	R402940
405420.top...	gnome.sh	[redacted]	Running	standard_sm
405422.top...	gnome.sh	[redacted]	Running	standard_sm
405426.top...	gnome.sh	[redacted]	Running	standard_sm

New
Detail
Connect
Clean

Output | Error | Log

[11:04:18:921] INFO

[11:04:18:927] Requesting updated status.

Save
Clear

SRD>

Cancel

SRD Job Submission

Job | Reservations

Remote
Window Size 1024x768

Pre-Built
Gnome Ensight MatLab
Paraview Tecplot Visit
glxgears glxspheres gterm

Custom-Built
Queue standard_lw
Script

Submit Cancel

of privileged communications, or work product, related to per
representation or services by attorneys, psychotherapists, or clergy, #

https://daac.hpc.mil/software/SRD/srdQuickStart.html

SRD Desktop

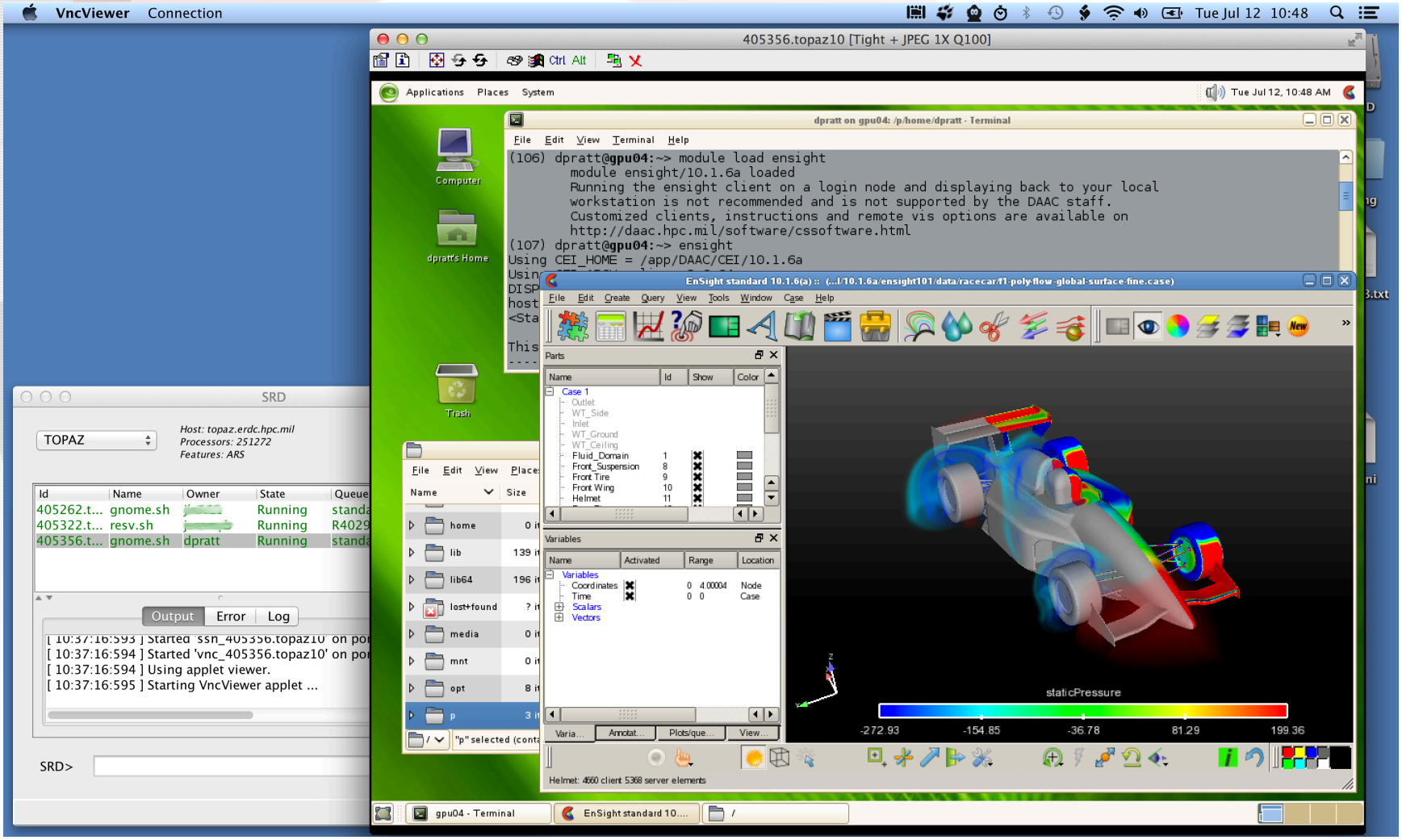
VncViewer Connection
Tue Jul 12 10:48
405356.topaz10 [Tight + JPEG 1X Q100]
Applications Places System
Tue Jul 12, 10:48 AM
dpratt on gpu04: /p/home/dpratt - Terminal
(106) dpratt@gpu04:~> module load ensight
module ensight/10.1.6a loaded
Running the ensight client on a login node and displaying back to your local
workstation is not recommended and is not supported by the DAAC staff.
Customized clients, instructions and remote vis options are available on
http://daac.hpc.mil/software/cssoftware.html
(107) dpratt@gpu04:~> ensight
Using CEI_HOME = /app/DAAC/CEI/10.1.6a
EnSight standard 10.1.6(a) :: (...l/10.1.6a/ensight101/data/racecar/f1-poly-flow-global-surface-fine.case)
Parts
Variables
staticPressure
-272.93
-154.85
-36.78
81.29
199.36
SRD
TOPAZ
Host: topaz.erdc.hpc.mil
Processors: 251272
Features: ARS
Output Error Log
SRD>

Short Demo / Questions

More Information:

https://daac.hpc.mil/software/SRD/